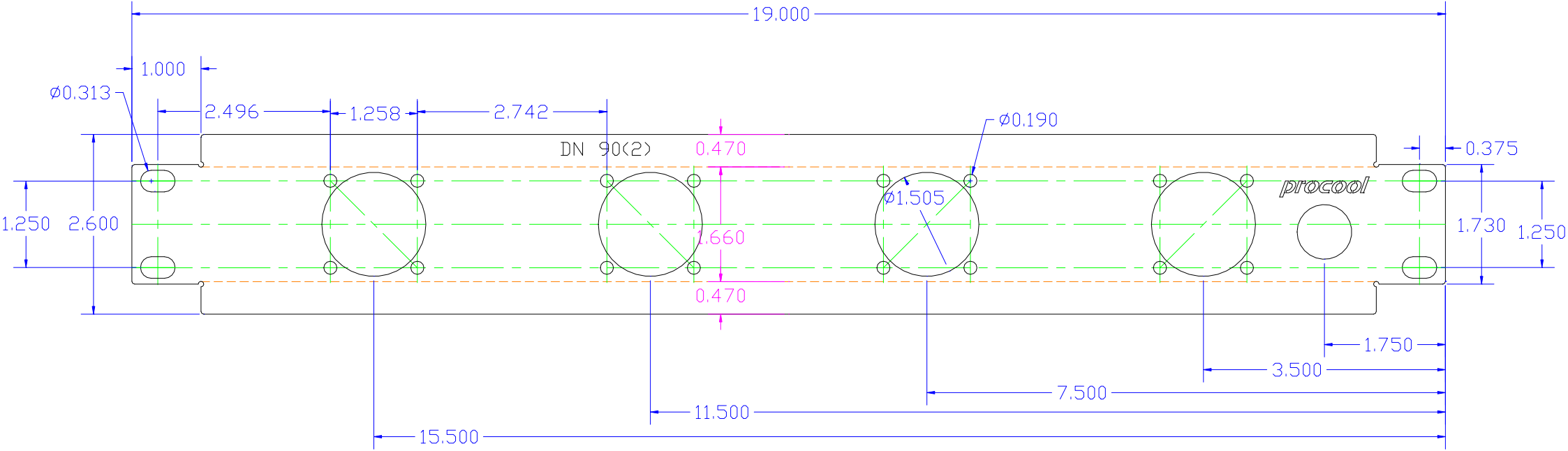


RACK FANS PROCOOL 1U-4X REV. 4 FOUR FANS SIDE SWITCH

NEW LOGO 1/27/2014 JOEL MOVED FAN SWICH AND LOGO

MAX O.S. 1.740" + 0/-.015" STANDARD