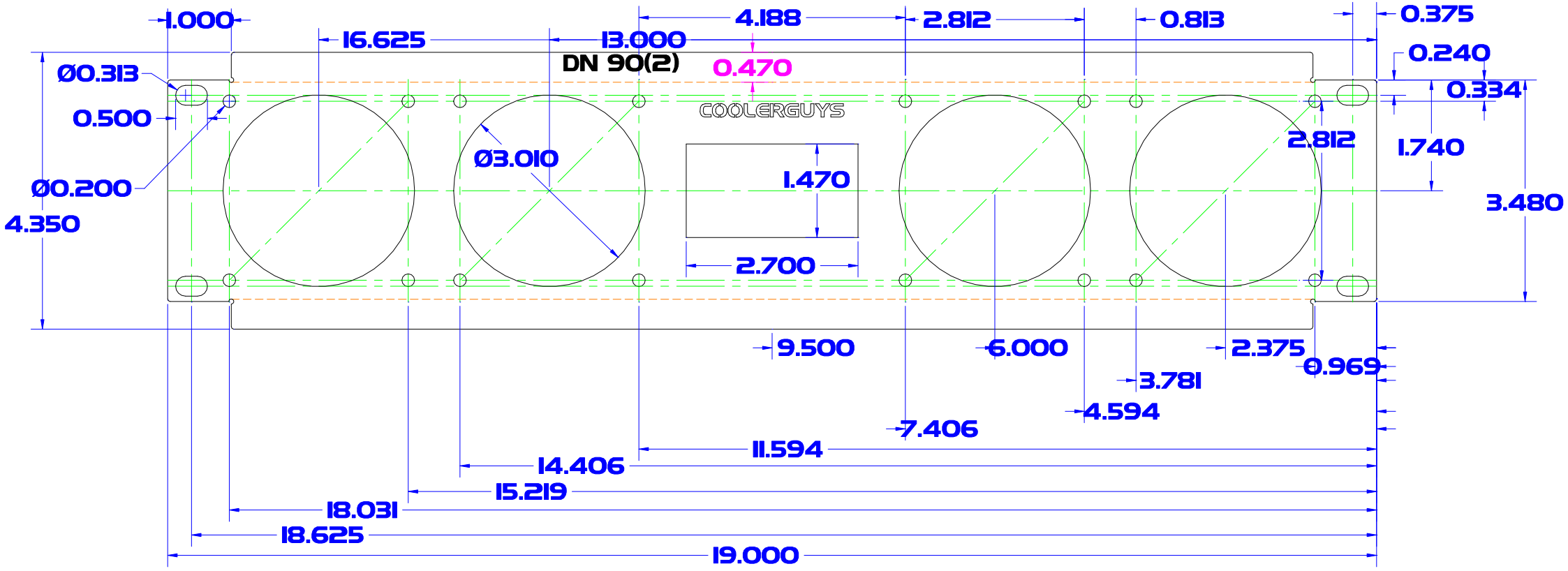

COOLERGUYS 2U-2X2-SQC FOUR FANS SQUARE CUTOUT
4/10/2014 JOEL

MAX O.S. 3.490" + 0/-.015" STANDARD

100PC-A 20GA CR X 4.35 X 19.00 LASER/FORM
4/10/2014 JOEL 4/10/2014 50PCS